## BOM TABLE - MIDDLE STRIP BMF WELDMENT

| Article number (galvanized) | Article number (coated) | Item number | Middle strip | C-C (mm) | LPL | HPL | TOTAL PL | L (mm) | Weight (kg) |
|---|---|---|---|---|---|---|---|---|---|
| 30934380 | 30934385 | F50-620-580.100 | F50-620-580.101 | (550) | 1 | - | 1 | 514 | 1,16 |
| 30934390 | 30934395 | F50-620-581.100 | F50-620-581.101 | 550 | 1 | 1 | 2 | 1064 | 2,14 |
| 30934400 | 30934405 | F50-620-582.100 | F50-620-582.101 | 550 | 2 | 2 | 4 | 2164 | 4,08 |
| 30934410 | 30934415 | F50-620-583.100 | F50-620-583.101 | 550 | 3 | 3 | 6 | 3264 | 6,02 |

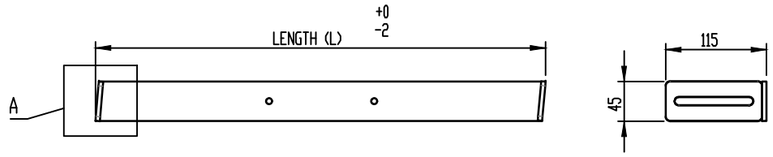


MIDDLE STRIP (1 PLACE)

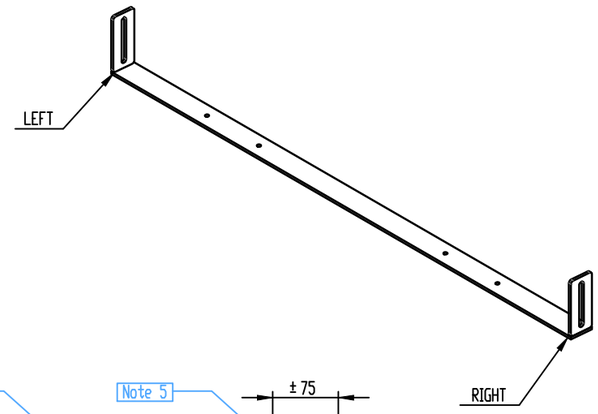


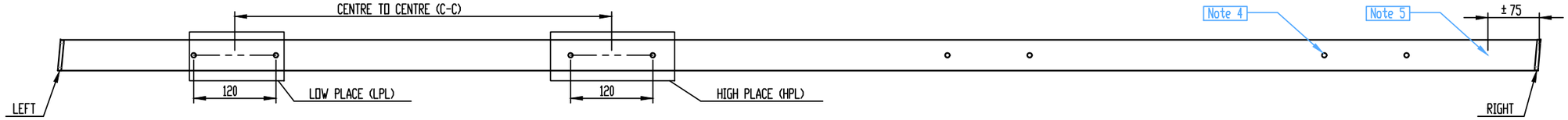


MIDDLE STRIP (1 PLACE)

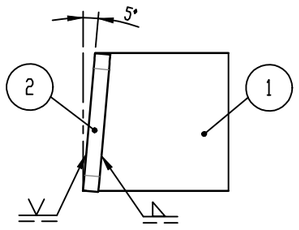


DETAIL A
SCALE 1 : 2

## Quality Control Table

| Dim. No. | Nominal Value | Actual Dimension | QA Pass | QA Fail | Accept (X) | Reject (X) | Remark |
|---|---|---|---|---|---|---|---|
| 1 | LENGTH (L) +0 -2 | | | | | | |
| 2 | Note 4 | | | | | | |

## GENERAL NOTES

| | |
|---|---|
| 1 | Grind and remove all sharp edges; general chamfer min. 0.2mm x 45 degrees |
| 2 | All parts need to be deburred, free of welding spatter and other forms of visual defects |
| 3 | Re-tap threaded holes after galvanizing |
| 4 | Holes need to be full length tapped |
| 5 | Add production mark according to drawing F050-620 800.201 - Assembly Marking |

| Pos. no. | Qty. | Artno. | Item name | Material | Remark | Dwg no. | Rev. |
|---|---|---|---|---|---|---|---|
| 2 | 2 | | Strip middle - Mounting plate | S235JR | | 599.101 | 01 |
| 1 | 1 | | Strip middle - Strip | S235JR | | 58x.101 | 06 |

Material: See BOM

Finishing: Thermal galvanized, NEN EN ISO 1461

Coating: Powder, NEN EN ISO 12944-5 / NEN-EN 15773

ProRail

by: SHA
by: RBA — date: 03-2025
by: - — project: DFPS
units: mm — scale: 1:7

Gen. tolerances according to NEN 2769-b
(for linear measurements in mm) unless stated otherwise:

| | | | |
|---|---|---|---|
| 0,5 - 6 | ±0,3 | 120 - 400 | ±1,2 |
| 6 - 30 | ±0,5 | 400 - 1000 | ±2 |
| 30 - 120 | ±0,8 | 1000 - 2000 | ±3 |
| | | 2000 - 4000 | ±4 |

(for shortest side of angular measurements in mm) unless stated otherwise:

| | | | | | |
|---|---|---|---|---|---|
| 0 - 10 | ±1,3° | 50 - 120 | ±0,3° | >400 | ±0,1° |
| 10 - 50 | ±1,0° | 120 - 400 | ±0,15° | | |

weight: various

product no. F050-620 - dwg.no. 58x.100 - rev. 03

artno: various

A3

Strip middle - BMF - Weldment

© Copyright Velopa B.V.: All rights reserved, Art. 31 and seq. of the Copyright Act.
This document remains property of Velopa B.V. and may not be revealed to third parties, duplicated or used for any application, without explicit permission of the owner.

© Copyright Velopa B.V.: Alle rechten voorbehouden, Art. 31 e.v. van de auteurswet.
Dit document blijft eigendom van Velopa B.V. en mag niet aan derden ter inzage worden gegeven, gedupliceerd of voor uitvoering worden gebruikt, zonder uitdrukkelijke toestemming van de eigenaar.